CERTIFICATE OF FIRE APPROVAL

This is to certify that

The product detailed below will be accepted for compliance with the applicable Lloyd's Register Rules and Regulations and with the International Convention for the Safety of Life at Sea, (SOLAS), 1974, as amended, for use on ships and offshore installations classed with Lloyd's Register, and for use on ships and offshore installations when authorised by contracting governments to issue the relevant certificates, licences, permits etc.

Manufacturer	Jung Gong Ind. Co. Ltd
Address	#546 Shinpyong-Dong Saha-Ku Pusan, 604-030 Republic of Korea
Type	**A-60 WINDOW (STANDARD FIRE TEST)**
Description	Fire Resisting Window – Type: "JG-A60-301
Specified Standard	IMO Fires Test Procedures Code, Annex 1, Part 3

The attached Design Appraisal Document forms part of this certificate.
This certificate remains valid unless cancelled or revoked, provided the conditions in the attached Design Appraisal Document are complied with and the equipment remains satisfactory in service.

Date of issue	5 September 2005	Expiry date	4 September 2010
Certificate No.	SAS F050309	Signed	Korea Plan Approval Services, Busan DSP Lloyd's Register Asia
Sheet No	1 of 2	Name	M. Farrier Surveyor to Lloyd's Register EMEA A Member of the Lloyd's Register Group

Note:

This certificate is not valid for equipment, the design or manufacture of which has been varied or modified from the specimen tested. The manufacturer should notify Lloyd's Register of any modification or changes to the equipment in order to obtain a valid Certificate.

"Lloyd's Register, its affiliates and subsidiaries and their respective officers, employees or agents are, individually and collectively, referred to in this clause as the 'Lloyd's Register Group'. The Lloyd's Register Group assumes no responsibility and shall not be liable to any person for any loss, damage or expense caused by reliance on the information or advice in this document or howsoever provided, unless that person has signed a contract with the relevant Lloyd's Register Group entity for the provision of this information or advice and in that case any responsibility or liability is exclusively on the terms and conditions set out in that contract."

LLOYD'S REGISTER GROUP PAPER (01/2005)

Lloyd's Register EMEA
71 Fenchurch Street, London, EC3M 4BS
Telephone 020 7423 2940 Fax 020 7397 4246
Email dcg-stat@lr.org

Document number SAS F050309

Issue number 1

DESIGN APPRAISAL DOCUMENT

Date	Quote this reference on all future communications
5 September 2005	LPA/SSS/FSS/FITA/WM/MF/ 1-14382522

ATTACHMENT TO CERTIFICATE OF TYPE APPROVAL No. SAS F050309

The undernoted documents have been appraised for compliance with the relevant requirements of International Conventions, and this Design Appraisal Document forms part of the Certificate.

APPROVAL DOCUMENTATION

Fire Insurers Laboratories of Korea (FILK), Kyunggi-Do, Korea, Fire Test Report No. 20050419, dated 1 August 2005.

CONDITIONS OF CERTIFICATION

1. Maximum clear sight size : 2000mm wide x 1500mm high.
2. Intended for use on tankers in accordance with SOLAS II-2/Regulation 4.5.2.3.
3. Application for of the windows in locations where the higher fire risk is on the internal side of the window, being considered at the design stage.
4. Glass panel of : 27mm thick Contraflam + 12mm air gap + 8mm thick toughened glass.
5. Glass fitted in windows and side scuttles for external use should, in addition to the required fire resisting ability, as appropriate, be of toughened quality and suitable to satisfy the operational requirements of the location in which the glass is fitted. For example, consideration should be given to the 1966 Load Line convention Regulation 20 - side scuttles.
6. Production items are to be manufactured in accordance with a quality control system which shall be maintained to ensure that items are of the same standard as the approved prototype.

NOTE

The window satisfied the requirements of the hose stream test procedure specified in IMO Resolution A.754(18), Appendix A.1.

PLACE OF PRODUCTION

Jung Gong Ind. Co. Ltd
#546, Shin Pyong-Dong
Saha-Gu
Busan
Korea

Korea Plan Approval
Services, Busan
Lloyd's Register Asia

Lloyd's Register

Martin Farrier
Senior Surveyor
Fire & Safety Section
Statutory & Structures Services
London Plan Approval

Supplementary Type Approval Terms and Conditions

This certificate and Design Appraisal Document relates to type approval, it certifies that the prototype(s) of the product(s) referred to herein has/have been found to meet the applicable design criteria for the use specified herein, it does not mean or imply approval for any other use, nor approval of any products designed or manufactured otherwise than in strict conformity with the said prototype(s).

LLOYD'S REGISTER GROUP PAPER (01/2005)

Approval Certificate

Germanischer Lloyd

This is to certify, that the product identified below has been tested in accordance with the relevant procedures as contained in the Fire Test Procedure Code (IMO-Res. MSC.61(67)) and was found in compliance with the applicable performance criteria contained in the specified standard.

Certificate No.	**26 469 - 05 HH**
Company	**Jung Gong Industri Co.,Ltd** **546 Shinpyong-Dong, Saha-ku** **Pusan, Korea**
Product Description	**Class A-60 fire resistant window type JG-A60-301**
Product Type	**Class A-60 window**
Approval Standard	**-IMO Res.MSC.61(67), Annex 1, Part 3** **-IMO Res.A.754(18) incl. A.I.5 (hose stream test)**
Documents	**Test report no. 20050419 dated 2005-08-01 issued by Fire Insurers Laboratories of Korea**
Application	**The above product may be applied on ships classed with Germanischer Lloyd and on ships for which the Society is responsible for the issue of the relevant certificate required by the "International Convention for the Safety of Life at Sea, 1974" including amendments as authorized by contracting governments.**
Remarks	**None**
Valid until	**2010-08-28**
	The company must inform Germanischer Lloyd of any modification or changes to approved product in order to obtain a valid certificate.

Hamburg, 2005-08-29

Germanischer Lloyd

J. Schreiter

A. Ullrich

The latest edition of the General Terms and Conditions of Germanischer Lloyd is applicable.
German law applies.

Approval Certificate

Germanischer Lloyd

principle components:

window consisting of 8 mm pressure glass and a fire resistant glass Contraflam N2 of 27 mm thickness mounted in a steel frame with an airgap of 12 mm in between; fire resistant glass on unexposed side; max. nominal size (width x heigth): 2000 mm x 1500 mm

work instructions:

execution on board according to makers work instruction

marking of window:

26469-05 HH

Certificate No. **26 469 - 05 HH**

Hamburg, 2005-08-29

The latest edition of the General Terms and Conditions of Germanischer Lloyd is applicable.
German law applies.

TYPE APPROVAL CERTIFICATE

형 식 승 인 증 서

Certificate No. : GCH02198-FP017 **Date of Approval :** 14th September, 2005.

Product : Fire Resistant Window

Manufacturer : Jung Gong Ind. Co., Ltd.
#546, Shinpyong-dong, Saha-gu, Busan, Korea

Product Description :
Type : JG-A60-301 (Fixed Square Window)
Grade : A-60 Class
Nominal Size : 2000 mm x 1500 mm (W x H)
Fire Glass : Contraflam N2, Thickness 27 mm
(Manufactured by Vetrotech Saint-Gobain, Germany)
Pressure Glass : Toughened, Thickness 8 mm
(Manufactured by Hankuk Glass Industries Inc., Korea)
Drawing No. : JG-A60-301, JG-A60-301-B1

*Remark : The hose-stream test was carried out with satisfactory result in accordance with the paragraph 5 of Appendix A.1 to IMO Res.A.754(18).

Approval Condition :
1. This approval is granted on the basis of the fire test report No. 20050419 dated 1 Aug. 2005 issued by FILK.
2. No product certificate required.

THIS IS TO CERTIFY that the above-mentioned product has been approved in accordance with the relevant requirement of this Society's Rules and / or of the recognized standards as follows and entered in the "List of Approved Manufacturers and Type Approved Equipment".

Pt. 8, Ch. 1, Sec. 1 of the Rules for Classification of Steel Ships, Ch. 3, Sec. 19 of the Guidance for Approval of Manufacturing Process and Type Approval, etc., FTPC Part 3 and IMO Res. A.754(18).

This Certificate is valid until 13th September, 2010.

Issued at Daejeon, Korea on 14th September, 2005.

한 국 선 급
KOREAN REGISTER OF SHIPPING

Mann-Eung Kim)
General Manager of
Materials and Equipment Team

Note : *1 : The approval will be automatically suspended and the Certificate become invalid from the expiry date of the Certificate in the event that the extension has not been granted or is not under attendance for completion of the renewal survey.*
2 : Any significant changes of products and/or manufacturing process render this certificate invalid.

DET NORSKE VERITAS

TYPE APPROVAL CERTIFICATE

CERTIFICATE NO. F-17863
This Certificate consists of 2 pages

This is to certify that the
Window and Glass Partition

with type designation(s)
A-60 Class Window (JG-A60-301)

Manufactured by
Jung Gong Ind. Co., Ltd.
Pusan 604-030, Republic of Korea

is found to comply with
Det Norske Veritas' Offshore Standards
Det Norske Veritas' Rules for Classification of Ships
Det Norske Veritas' Interpretation of SOLAS 1974 Convention as Amended

Application
Approved for use as an integrated part of fire resisting bulkheads of class A-60. Maximum size of fire technical glazing unit: 2000 x 1500 mm (W x H).

Place and date
Høvik, 2005-11-10
for DET NORSKE VERITAS AS

Hilde Smedal Thunes
Head of Section

Local Office
DNV Pusan Station

This Certificate is valid until
2009-12-31

Håkon Laskemoen
Surveyor

Notice: This Certificate is subject to terms and conditions overleaf. Any significant change in design or construction may render this Certificate invalid. The validity date relates to the Type Approval Certificate and not to the approval of equipment/systems installed.

If any person suffers loss or damage which is proved to have been caused by any negligent act or omission of Det Norske Veritas, then Det Norske Veritas shall pay compensation to such person for his proved direct loss or damage. However, the compensation shall not exceed an amount equal to ten times the fee charged for the service in question, provided that the maximum compensation shall never exceed USD 2 million.In this provision "Det Norske Veritas" shall mean the Foundation Det Norske Veritas as well as all its subsidiaries, directors, officers, employees, agents and any other acting on behalf of Det Norske Veritas.

Cert. No.: F-17863
File No.: 471.75
Case No.: 262.1-000174

Product description

"A-60 CLASS WINDOW (JG-A60-301)"

constructed of 8 mm toughened pressure glass and 27 mm fire proof glass, type "Contraflam N2" spaced 12 mm apart by an air gap containing dehydrated air. Main frame is made from 12 mm steel. Pressure glass retaining frame is made from 5 mm steel. Fire glass frame is made from 12 mm steel. Fire glass retaining frame is made from 5 mm stainless steel (SUS 304) and bolted to main frame. Window box constructed from 1.6 mm steel is fitted to retaining frame.

Applications/Limitations

The window has only been evaluated with respect to fire technical properties (e.g. strength requirements have not been considered). Arrangement and location of any window is subject to approval from relevant authority in each case.

Fire against toughened pressure glass side.

Each product is to be supplied with its manual for installation, use and maintenance.

Hose Stream Tests were carried out with satisfactory results according to IMO Res. A.754(18) Appendix A.I.5.

Type Approval documentation

Certification in accordance with Certification Note No. 1.2, Type Approval, December 1996.

Test report No. 20050419 dated 1 August 2005 from FILK, Kyunggi-Do, Korea.

Tested according to IMO FTPC Part 3, IMO Res. A.754(18)

Marking of product

The product or packing is to be marked with name of manufacturer, type designation and fire-technical rating.

Certificate retention survey

Det Norske Veritas' surveyor is to be given permission to perform Certification Retention Surveys at any time during the validity period of this certificate. The arrangement is to be in accordance with procedure described in item 4.3, Certification Note No. 1.2.

END OF CERTIFICATE

NIPPON KAIJI KYOKAI

Certificate

OF

APPROVAL

Certificate No.
05EQ398FPA(N)

Item	:	A-60 class window
Type	:	JG-A60-301
Specification	:	See Annex.
Manufacturer	:	Jung Gong Ind. Co., Ltd. #546, Shinpyong-dong, Saha-gu, Busan, Korea
Maximum size	:	2000mm×1500mm (width×height)
Limitation	:	1. Products of the type should not be used for the spaces specified in Part C/23.5.2-1 and -2 of the Society's Rules for Survey and Construction of Steel Ships, unless they are certified to be complied with the requirements given in the same provisions. 2. The top of frame of the window is to be located at a height of 2312 mm or less above floor level.
Testing standard	:	IMO FTP Code Annex1 / Part 3
Test report		
Test laboratory	:	Fire Insurers Laboratories of Korea, Korea
Report number	:	20050419
Fire side	:	Exposed side (Non-insulation side)

THIS IS TO CERTIFY that the above type of products has been approved by Nippon Kaiji Kyokai with type approval No. 05FPA77DA and that products of the type will be accepted for use onboard ships classed with the Society for compliance with the relevant requirements of the Society's *Rules for the Survey and Construction of Steel Ships* and those of the *International Convention for the Safety of Life at Sea, 1974, as amended,* subject to approval of the flag Administration and conditional upon that the manufacturer has a quality control system audited by a competent authority to ensure continuous compliance with the type approval conditions..

This certificate is valid until 1st December 2010.
Issued at Tokyo on 2nd December 2005.

NIPPON KAIJI KYOKAI

H. Kitada
General Manager
Material and Equipment Department

Initial approval date : 2nd December 2005

Annex to the Certificate No. 05EQ398FPA(N)

(Dimension : mm)

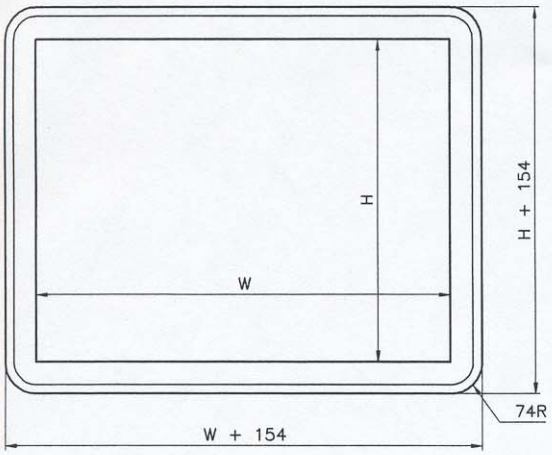

Seen from exposed side

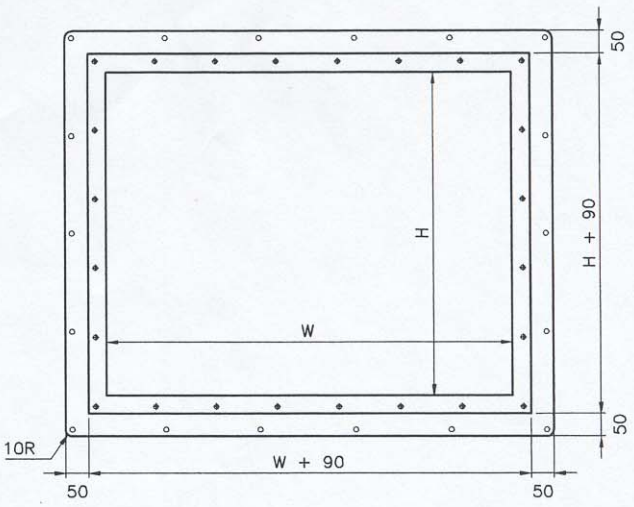

Seen from unexposed side

DIMENSION TABLE			
TYPE OF NO.	NOMINAL SIZE	PRECUT HOLE	Q'TY
	W x H	W1 x H1	
JG-A60-301	2000 x 1500	2157 x 1657	

(Unexposed face)

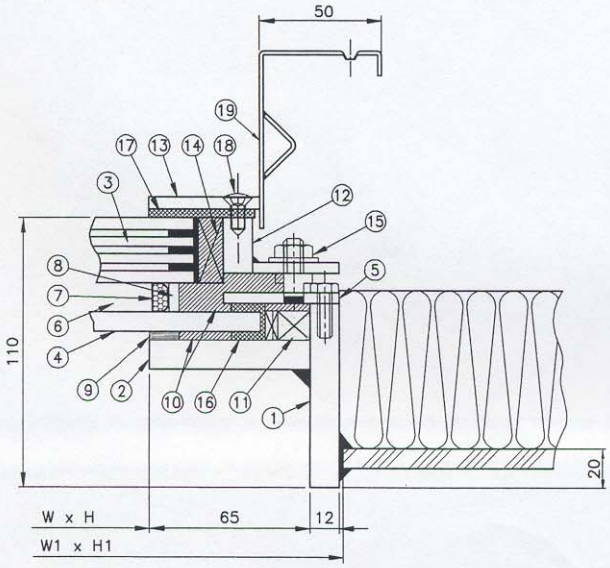

(Exposed face)

NO	DESCRIPTION	MATERIAL	Q'TY	REMARK
19	WINDOW BOX	MILD STEEL		1.6T
18	SCREW	SUS 304		M6
17	PACKING	NEOPRENE		4.5T
16	PACKING	NEOPRENE		4.5T
15	BOLT & NUT	SUS 304		M8
14	SETTING BLOCK	HARDBOARD		10T
13	FIRE GLASS RETAINING FRAME	SUS 304	1	5T
12	FIRE GLASS FRAME	MILD STEEL	1	12T
11	INSULATION MATERIAL	CERAMIC WOOL		
10	INSULATION MATERIAL	CERAMIC FIBRE		KERAFIX
9	STUFFING COMPOUND	SILICONE SEALANT OR EQUIVALENT		3.5T
8	SEALING COMPOUND	SILICONE SEALANT		4T
7	SPACER	MILD STEEL	1	12T
6	SPACE	DEHYDRATED AIR		12T
5	PRESSURE GLASS RETAINING FRAME	MILD STEEL	1	5T
4	PRESSURE GLASS	TOUGHENED	1	8T
3	FIRE RESISTANT GLASS	CONTRAFLAM N2	1	27T
2	GLASS STOPPER	MILD STEEL	1	12Tx65
1	MAIN FRAME	MILD STEEL	1	12Tx75

No.3: Fire resistant glass
-Brand name: CONTRAFLAM N2
-Thickness: Toughened glass 5mm + Inlet-layer 3mm
+ Toughened glass 4mm + Inlet-layer 3mm
+ Toughened glass 4mm + Inlet-layer 3mm
+ Toughened glass 5mm = 27mm
-Manufacturer: VETROTECH SAINT-GOBAIN EUROPE, NETHERLANDS

No.4: Pressure glass
-Brand name: Toughened glass
-Thickness: 8mm
-Manufacturer: JEONG-AM SAFETY GLASS, KOREA

TYPE APPROVAL CERTIFICATE
No. **LAB351105CS**

This is to certify that the product identified below is in compliance with the regulations herewith specified.

Description	**Fire resisting windows**
Type	**A60 CLASS FIRE RESISTANT WINDOW**
Applicant	**JUNG GONG IND.CO.,LTD** **546 SHINPYUNG-DONG SAHA-KU PUSAN - KR** **KOREA, REPUBLIC OF**
Manufacturer	**JUNG GONG IND.CO.,LTD**
Place of manufacture	**546 SHINPYUNG-DONG SAHA-KU PUSAN - KR** **KOREA, REPUBLIC OF**
Reference standards	**Chapter 4, Part C of RINA Rules; IMO Res. MSC. 61(67) Annex 1 Part 3**

Issued in **Genoa** on **September 7, 2005.** *This Certificate is valid until* **September 6, 2010**

RINA

Massimo Dinale

This certificate consists of this page and 1 enclosure

RINA Società per azioni
Via Corsica, 12 - 16128 Genova
Tel +39 010 53851
Fax +39 010 5351000

TYPE APPROVAL CERTIFICATE
No. **LAB351105CS**
Enclosure - Page 1 of 1
A60 CLASS FIRE RESISTANT WINDOW

Product description

Window composed of a single composite pane having maximum clear size of 2000 mm in width and 1500 mm in height. The frame is composed of a carbon steel welded profile (12 mm thick) and a stainless steel glass retaining flat (5 mm thick) screwed to the frame. The glass pane compound, having total thickness of 47 mm, is composed, moving form the side exposed to the fire, of an 8 mm thick toughned pane, a void space having thickness of 12 mm and a 27 mm thick pane type CONTRAFLAM N2 (composed of four panes 5, 4, 4 and 5 mm thick with three gel layers 3 mm thick each in between). Silicone, neoprene and ceramic gaskets are fitted between the glass faces and edges and the steel frame.

Field of application

Fire resistant A-60 Class window with fire hazard in the outer side of the application. Hose stream test resistant.

Reference documents

Drawings as included on pages 7, 8 and 9 of FIRE INSURERS LABORATORIES OF KOREA test report No. 20050419 dated 1 August 2005.

Tests carried out

Tests as per FIRE INSURERS LABORATORIES OF KOREA Test report No. 20050419 dated 1 August 2005 issued according to IMO Res. A.754(18).

Remarks

Each item of the mass production to be fitted on vessels classed by RINA is to be previously inspected at the manufacturer workshop by a RINA Surveyor and is to be marked or labelled with the trade name and the data of the Company to whom this Certificate is addressed. The validity of this Certificate ceases in the case of amendments to the rules on the basis of which the Certificate was issued.

Genoa September 7, 2005

RINA Società per azioni
Via Corsica, 12 - 16128 Genova
Tel +39 010 53851
Fax +39 010 5351000

MARINE DIVISION

17 bis Place des Reflets - La Défense 2
92400 Courbevoie - France

Tel. 33 1 42 91 52 91
Fax. 33 1 42 91 28 94
www.veristar.com

Certificate number: 15642/A0 EC

File number : ACI 6000/24/13

Annex A1 Item number : A.1/3.25

This certificate is not valid when presented without the full attached schedule composed of 7 sections

EC TYPE EXAMINATION CERTIFICATE

as per Module B of European Union Council Directive 96/98/EC on marine equipment as last amended by Commission Directive 2002/75/EC of 2 September 2002

This certificate is issued to

JUNG GONG IND. CO., LTD.

BUSAN - KOREA (REPUBLIC OF)

for the type of product

WINDOWS AND SIDE SCUTTLES

A-60 Class Fire Resisting Windows - Type: "JG-A60-301"

Regulations and standards :
SOLAS 74 Convention, as amended, Reg. II-2/9.4.1.3 - IMO Resolution A.754(18) - IMO Resolution MSC 61(67) [FTP Code] Annex 1, Part 3 - IMO MSC/Circ.1004.

This certificate is issued under the French Maritime Authority to attest that BUREAU VERITAS did undertake the relevant type-examination procedures for the product identified above which was found to comply with the relevant requirements of the Council Directive 96/98/EC of 20 December 1996 as amended

This certificate is valid until : 13 Mar 2011

At Paris la Défense, on : 13 Mar 2006

For BUREAU VERITAS, Notified Body N°0062
By order of the Secretary

J.BENOIT

Approval office

Local office : BV PUSAN
Surveyor : K. Lee

This certificate does not allow to issue the Declaration of Conformity and to affix the mark of conformity (wheelmark) to the products corresponding to this type. To this end, the production-control phase module (D, E or F) of Annex B of the Directive is to be complied with and controlled by a written inspection agreement with a notified body.
This certificate remains valid until the date stated above, unless cancelled or revoked, provided the conditions indicated in the subsequent page(s) are complied with and the product remains satisfactory in service. This certificate will not be valid if the applicant makes any changes or modifications to the approved product, which have not been notified to, and agreed in writing with BUREAU VERITAS. Should the specified regulations or standards be amended during the validity of this certificate, the product(s) is/are to be re-approved prior to it/they being placed on board vessels to which the amended regulations or standards apply. BUREAU VERITAS S.A. is designated by the French Maritime Authority as a "notified body" under the terms of the French Regulations Division 140 Chapter 140-2. This certificate is issued within the scope of the General Conditions of BUREAU VERITAS Marine Division. Any Person not a party to the contract pursuant to which this document is delivered may not assert a claim against BUREAU VERITAS for any liability arising out of errors or omissions which may be contained in said document, or for errors of judgement, fault or negligence committed by personnel of the Society or of its Agents in establishment or issuance of this document, and in connection with any activities for which it may provide.

THE SCHEDULE OF APPROVAL

1. PRODUCT DESCRIPTION :

A-60 Class Fire Resisting Windows - Type: "JG-A60-301"

The window construction consists in a fire glass "CONTRAFLAM N2" 27 mm thick and a pressure glass "Toughened glass" 8 mm thick separated by a spacer made up of mild steel and an air gap 12 mm thick.

These glasses are mounted into a steel main frame 12 mm thick, a pressure glass retaining steel frame 5 mm thick, a fire glass steel frame 12 mm thick and a fire glass retaining steel frame 5 mm thick. Frames are fixed one to each other with M6 screws and M8 bolts and nuts.

Insulation between glasses and steel frames is made by means of ceramic fiber "Kerafix", ceramic wool, silicon and neoprene sealant.

The window's box is made up of 1.6 mm thick steel plates.

Maximum nominal size of the window: 2000 mm x 1500 mm (width x height).

Fire against the pressure glass face.

2. DOCUMENTS AND DRAWINGS :

As per the Manufacturer's Specifications.

3. TEST REPORTS :

Fire resistance and hose stream test report No. 20050419 dated August 1, 2005 as per IMO FTP Code Annex 1 Part 3 [testing standard: IMO Resolution A.754 (18)] from FILK, Korea.

Materials and components required to be type approved or type tested:
Surface linings to be EC type approved and to bear the ⎈ mark.

4. APPLICATION / LIMITATION :

Application / Limitation of use:
- Approval also valid for ships having to comply with Regulations stated on the front page of the certificate, and for units having to comply with IMO Resolution A.649 (The "MODU Code").

Other materials and/or components:
- Fire resistant glass: "Contraflam N2" manufactured by Vetrotech Saint-Gobain, Germany.
- Pressure glass: "Toughened glass" manufactured by Hankuk Glass Industries Inc., Korea.

On board installation & Maintenance requirements:
- The Manufacturer's instruction manual should be kept on board.
- Flame spread, smoke characteristics and calorific value of the lining to be as per Rule requirements.
- The fitting aboard to be the same as used for the test.

5. PRODUCTION SURVEY REQUIREMENTS :

5.1 - The production conformity assessment module shall either be "D, Production-Quality Assurance" or "E, Product-Quality Assurance" or " F, Product Verification".

5.2 - Each equipment or batch of equipment is to be supplied with its manual (or instructions) for installation, use & maintenance in the language required by the Ship's Flag Administration.

6. MARKING OF PRODUCT :

Every item, or batch of items, or their packing to bear the following marking:

- ⎈ conformity mark and number of the Notified Body undertaking surveillance module (where BV, 0062).
- Last two digits of year mark affixed.

7. OTHERS :

This approval is given on the understanding that the Manufacturer will accept full responsibility for informing shipbuilders or their sub-contractors of the proper methods of fitting and general maintenance of the approved equipment and the conditions of this approval.

***** END OF CERTIFICATE *****

Certificate Number: 06-BK485994-PDA

Confirmation of Product Type Approval 15/APR/2009

Please refer to the "Service Restrictions" shown below to determine if Unit Certification is required for this product.

This is to certify that, pursuant to the Rules of the American Bureau of Shipping (ABS), the manufacturer of the below listed product held a valid Manufacturing Assessment (MA) with expiration date of 16/JUL/2013. The continued validity of the Manufacturing Assessment is dependent on completion of satisfactory audits as required by the ABS Rules.

And; a Product Design Assessment (PDA) valid until 14/SEP/2011 subject to continued compliance with the Rules or standards used in the evaluation of the product.

The above entitle the product to be called Product Type Approved.

The Product Design Assessment is valid for products intended for use on ABS classed vessels, MODUs or facilities which are in existence or under contract for construction on the date of the ABS Rules used to evaluate the Product.

ABS makes no representations regarding Type Approval of the Product for use on vessels, MODUs or facilities built after the date of the ABS Rules used for this evaluation.

Due to wide variety of specifications used in the products ABS has evaluated for Type Approval, it is part of our contract that; whether the standard is an ABS Rule or a non-ABS Rule, the Client has full responsibility for continued compliance with the standard.

JUNG GONG IND. CO.
Model Name(s): JG-A60-301 & JG-A60-451

Presented to:
JUNG GONG IND. CO.
546, SHINPYUNG-DONG
SAHA-KU
PUSAN
604-030
Korea, Republic of

Intended Service:	For use on Ships and Offshore Installations
Description:	JG-A60-301: A-60 Class Rectangular Windows (Size: 2000mm(W) X 1500mm(H), Fire Glass(27mm) & Pressure Glass(8mm)), JG-A60-451: A-60 Class Side Scuttle (Size: Dia. 450mm, Fire Glass(27mm) & Pressure Glass(10mm))
Ratings:	A-60 Class Division
Service Restrictions:	Unit Certification is not required for this product.
Comments:	Our approval is based on that the above materials have been tested and certified by Fire Insurers Laboratories of Korea (FILK)
Notes / Documentation:	
Term of Validity:	Certificate 06-BK485994-PDA, dated 15/Sep/2006 is valid for 5 years from date of issue or until the applicable Rules or standards are revised (whichever occurs first). Product use on or after 1 January 2007, will be subject to compliance with the ABS Rules or specifications in effect when the vessel, MODU or facility is contracted.
ABS Rules:	This Product Design Assessment (PDA) is valid only for products intended for use on ABS classed vessels, MODUs or facilities which are in existence or under contract for construction on the date of the ABS Rules used to evaluate the Product as follows: 2006 Steel Vessel Rules 1-1-4/7.7
National Standards:	

Copyright 2001 American Bureau of Shipping. All rights reserved.

International Standards: IMO Resolution A. 754(18) in conjunction with SOLAS, 1974 as amended

Government Authority:
EUMED:
Others:

ABS Programs

ABS has used due diligence in the preparation of this certificate and it represents the information on the product in the ABS Records as of the date and time the certificate was printed. Type Approval requires Drawing Assessment, Prototype Testing and assessment of the manufacturer's quality assurance and quality control arrangements. Limited circumstances may allow only Prototype Testing to satisfy Type Approval. The approvals of Drawings and Products remain valid as long as the ABS Rule, to which they were assessed, remains valid. ABS cautions manufacturers to review and maintain compliance with all other specifications to which the product may have been assessed. Further, unless it is specifically indicated in the description of the product; Type Approval does not necessarily waive witnessed inspection or survey procedures (where otherwise required) for products to be used in a vessel, MODU or facility intended to be ABS classed or that is presently in class with ABS. Questions regarding the validity of ABS Rules or the need for supplemental testing or inspection of such products should, in all cases, be addressed to ABS.

Copyright 2001 American Bureau of Shipping. All rights reserved.

РОССИЙСКИЙ МОРСКОЙ РЕГИСТР СУДОХОДСТВА
RUSSIAN MARITIME REGISTER OF SHIPPING

6.8.4

СВИДЕТЕЛЬСТВО О ТИПОВОМ ОДОБРЕНИИ СУДОВОЙ ПРОТИВОПОЖАРНОЙ КОНСТРУКЦИИ
TYPE APPROVAL CERTIFICATE FOR FIRE-PROOF DIVISION

Наименование и тип огнестойкости
Designation and class of fire resistance — *Окна типа А-60 (JG-A60-301)*
A-60 Class Windows (JG-A60-301)

Разработчик (изготовитель)
Designer (manufacturer) — *Jung Gong Ind. Co., Ltd*

Адрес
Address — *#546 Shinpyog - Dong, Saha - Gu, Busan, Korea*
Fax: 82 051 263 2597

На основании освидетельствования и проведенных испытаний удостоверяется, что вышеупомянутая(ые) конструкция(и) удовлетворяет(ют) требованиям Российского морского регистра судоходства.

This is to certify that on the basis of the survey and tests carried out the above mentioned division(s) complies(ly) with the requirements of Russian Maritime Register of Shipping.

и Правила II-2/9.4.1.3 СОЛАС -74 с поправками 2000.
and Regulation II-2/9.4.1.3 of SOLAS-74 as amended in 2000.

Настоящее Свидетельство о типовом одобрении действительно до
This Type Approval Certificate is valid until — *17.10.2011*

Настоящее Свидетельство о типовом одобрении теряет силу в случаях, установленных в Правилах технического наблюдения за постройкой судов и изготовлением материалов и изделий для судов.

This Type Approval Certificate becomes invalid in cases stipulated in Rules for the Technical Supervision during Construction of Ships and Manufacture of Shipboard Materials and Products.

Дата выдачи
Date of issue — *17.10.2006* № *06.00038.294*

Код номенклатуры
Code of nomenclature — *06010000МК*

Российский морской регистр судоходства
Russian Maritime Register of Shipping — *Овдей В.С. / V. Ovdey*

М.П. (подпись) (фамилия, инициалы)
L.S. (signature) (name)

Краткое описание конструкции
Brief description of the division

Окно имеет максимальный размер в свету 2000x1500мм. Степлопакет, имеющий общую толщину 47мм, состоит из закаленного стекла толщиной 8мм типа "Toughened Glass" (производства Hunkuk Glass Industries Inc. Korea) 12мм воздушного зазора и огнестойкого стеклопакета " Contraflam N2" (производства Vetrotech Saint - Gobain, Германия) толщиной 27мм. Стальная рама состоит из профилей толщиной 5мм и 12мм, изготовленных из углеродистой стали. Пространство между стеклопакетом и стальной рамой заполнено материалами "Kerafix"(производства Gluske GmbH, Германия) и "Ceramic wool" (производства KCC, Корея).

Window has maximum clear size of 2000x1500mm. The glass pane compound, having total thickness of 47mm, is consisted of a 8mm thick hardened glass type Toughened Glass manufactured by Hankuk Glass Industries Inc. Korea. , a 12mm thick air gap and a 27mm thick fire resistant composite glass type Contraflam N2 manufactured by Vetrotech Saint -Gobain, Germany. Window is composed of carbon steel profiles having thickness of 5 and 12mm. "Kerafix" manufactured by Gluske GmbH, Germany и "Ceramic wool" manufactured by KCC, Корея are fitted between glass pane and steel frame.

Техническая документация и дата ее одобрения Российским морским регистром судоходства
Technical documentation and the date of its approval by Russian Maritime Register of Shipping

Чертеж No. JG - A60 - 301 одобрен письмом No.294-002-6.3-001798 от 21.04.2006
Drawing No. JG - A60 - 301 approved by letter No. 294-002-6.3-001798 dated 21.04.2006

Образец изделия изготовлен под техническим наблюдением Российского морского регистра судоходства.
Product's specimen has been manufactured under the technical supervision of Russian Maritime Register of Shipping.

Акт(ы) (№, дата)
Report(s) (No., date) ***06.00076.294 от/of 17.10.2006***

Испытания на огнестойкость проведены (название организации)
Fire tests carried out by (name of organization)

Испытательной лабораторией /Test Laboratory: "Fire Insurers Laboratories of Korea"
Адрес/Address: 69-1 Simseok-Ri, Ganam-Myeon, Yeoju-Gun, Gyeonggi-Do, 469-881, Korea

Протокол(ы) испытаний (№, дата)
Test report(s) (No., date) ***20050419 от/of 01.08.2005***

Испытания проведены в соответствии с частью 3 Приложения I "Международного Кодекса по применению процедур испытания на огнестойкость"
The tests was carried out in accordance with IMO FTP Code, Annex 1 Part 3.

Область применения и ограничения
Application and limitations

Для использования в конструктивной противопожарной защите судов.
For use in structural fire protection of sea-going ships.

Вид документа, выдаваемого на изделие
Type of document issued for product ***Копия настоящего Свидетельства о типовом одобрении.***
Copy of this Type Approval Certificate.

中 国 船 级 社

证书格式号/Form: T01.00-NJ000250

CHINA CLASSIFICATION SOCIETY

型 式 认 可 证 书

CERTIFICATE OF TYPE APPROVAL

证书编号/Certificate No. FS07T00019

兹证明本证书所述制造厂生产的下列产品能够满足下面列明认可标准的要求。

This is to certify that the following products produced by the manufacturer stated in the certificate can meet the requirements of the approval standards listed below.

认可产品/ Product Approved

A-60防火窗

A-60 WINDOW

防火矩形窗

Fireproof Rectangular Window

制造厂/ Manufacturer

JUNG GONG IND. CO., LTD.

JUNG GONG IND. CO., LTD.

#546, Shinpyong-dong, Saha-gu, Pusan, Korea

#546, Shinpyong-dong,Saha-gu,Pusan,Korea

认可标准/ Approval Standard

1.IMO.FTPC Part3 《国际耐火试验程序应用规则》附件1第3部分
Part 3, Annex 1 of IMO International Code for Application of Fire Test Procedures

2.IMO A.754(18)《关于"A"、"B"和"F"级分隔耐火试验程序的建义案》
The Recommendation of Fire Test Procedure For"A","B"and "F "Class Divisions,IMO A.754(18)

证书有效期至/ This Certificate is valid until 2011年8月16日 / Aug. 16, 2011

发证机构 Issued by 中国船级社釜山办事处 CCS Pusan Office

签发日期 Date 2007年8月17日 Aug. 17, 2007

中国船级社 C105

本证书根据中国船级社规范及有关程序规定签发。关于证书的有关规定见本证书反面的说明。当本证书包括多页纸张时，则所有证书页为一个整体，必须同时使用。每一页证书均须由本社盖章方为有效。证书复印件无效。任何单位和个人均不应摘录或节选本证书的部分内容。本认可证书不代表本社对实物产品质量的最终确认。有关各方对所持证书的真实性有疑问时，可以向我社检验机构咨询。

This Certificate is issued pursuant to the Rules and related procedures of the Society. Refer to the back of the certificate for detailed requirements of the certificate. When the certificate consists of more than one page, all pages of the certificate are taken as a whole and are used simultaneously. No certificate pages is valid without bearing the stamp of the Society and no copied form of the certificate is regarded as valid. Any part of the certificate is not to be extracted or abridged by anyform. This approval certificate does not constitute the final confirmation of the Society about the quality of the actual product. Related parties who are doubted about the authenticity of the certificate may inquire of the Society or its offices.

中国船级社总部/CCS hoadquarters：北京市东直门南大街9号船检大厦 邮编：100007 电话/Tel：+86(10)58112288 传真/Fax：+86(10)58112811
CCS Mansion, 9 Dongzhimen Nan Da Jie, Beijing 100007, China 网址/Web Site: http://www.ccs.org.cn
本地检验机构/CCS Local Office: 中国船级社釜山办事处 CCS Pusan Office 电话/Tel: 0082-51-4632658 传真/Fax: 0082-51-4632657

FS31178997

No 06217234

产品明细/Product Description

防火矩形窗/Fireproof Rectangular Window

型号/Model	: JG-A60-301
产品规格/Specification	: Max.Norminal size:2000x1500mm(WxH)
主要材料/Material	: CONTRAFLAM N2
耐火等级/Fire Class	: A-60
玻璃厚度/Thickness of Glass	: FIRE RESISTANT GLASS:27mm; PRESSURE GLASS:8mm
主要组成/Principal Component of Material	: 27mm thick CONTRAFLAM N2+12mm air gap+8mm thick pressure glass
隔热材料/Insulation Material	: Fire against pressure glass side

批准的图纸和设计计算书/ Approved Drawings and Design Calculations

图纸批准号/ Drawings Approval No.	:	FS07A00073
批准图纸或技术文件编号	:	JG-A60-301
文件名称:	:	
Description:	:	A-60 CLASS FIRE RESISTANT WINDOW

产品认可试验报告/Approval Test Report

试验报告编号/Test Report No.	:	20050419(FILK report)
试验报告日期/Test Report Date:	:	2005-08-01
试验单位/ Laboratory:	:	FIRE INSURERS LABORATORIES OF KOREA
试验单位地址/ Test Address:	:	69-1 Simsuk-Li, Gannam-myun, Yoju-Kun, Kyunnggi-Do, 469-880, Korea
试验报告编号/Test Report No.	:	FS07T00019
试验报告日期/Test Report Date:	:	2007-07-09
试验单位/ Laboratory:	:	JUNG GONG IND. CO.,LTD JUNG GONG IND. CO.,LTD
试验单位地址/ Test Address:	:	#546, Shinpyong-dong, Saha-gu, Pusan, Korea #546, Shinpyong-dong, Saha-gu, Pusan, Korea

产品适用范围/Application of the Product

Marine A-60 class fire resistant window

认可保持条件/ Maintenance Requirements of Approval

型式认可后，如果产品及其重要零部件的设计、所用材料或制造方法有所改变，且影响到产品的主要特性、特征；或产品的性能指标有所更改，且超过认可的范围，则有关图纸和文件应经本社审批，并在本社认为必要时，经本社检验人员见证有关试验和进行检查，其结果应能证实仍符合认可条件。

After Type Approval, if there are changes to the design, materials used or manufacturing method of the product and important components and such changes affect major characteristics and properties of the product, or performance index of the product are changed and exceed the scope of approval, relevant drawings and documents are to be reviewed and approved by the Society. Where deemed necessary by the Society, the surveyor to the Society will witness relevant tests and conduct inspection and the results should be able to demonstrate compliance with the approval conditions.

认可后的产品检验方式/ Method of product inspection after approval

产品认可后的单件/单批检验应由本社验船师按批准的产品检验计划进行，经检验合格后由本社颁发产品证书。

After product approval, UNIT/BATCH INSPECTIONS should be carried out by the Surveyor of the Society in accordance with the approved product inspection scheme, and the Product Certificate will be issued by the Society upon satisfactory inspection.

其他/ Others

中国船级社釜山办事处

CCS Pusan Office

中国船级社 C1 03 CHINA CLASSIFICATION SOCIETY

*****本证书正文完/ End of Text*****

No 06520238

U. S. Department of Homeland Security
United States Coast Guard
Certificate of Approval

Coast Guard Approval Number: 164.137/14/0 Expires: 06 October 2011

WINDOWS (IMO)

Jung Gong Ind. Co., Ltd.
546, Shinpyung-Dong
Saha-Gu, Busan 604-030
KOREA, REPUBLIC OF

"Model JG-A60-301" is approved as a Class "A-60" window as meeting Part 3 of Annex 1 of the IMO FTP Code. Met thermal radiation test supplement and hose stream approval criteria.

Approved for use as an integrated part of the fire resisting divisions of Class "A-60". Maximum clear glass dimensions are 2000 mm in width and 1500 mm in height. Approved glazing is Contraflam. Window frame is to be welded to bulkhead per manufacturer's instructions.

Fire tested with pressure glass on exposed (fire) side and bulkhead stiffeners and insulation on unexposed side.

Identifying Data: Fire Insurers Laboratories of Korea (FILK) Report No. D206-002W-1 dated June 12, 2006, and Report No. D105-004NC dated January 9, 2006; FILK Service Agreement No. D206-002 dated April 24, 2006; and Drawing Nos. JG-A60-301 dated April 13, 2006 and JG-A60-301-B dated May 15, 2006.

Factory: 564, Shinpyung-Dong, Saha-Gu, Busan, Korea
Only valid for windows manufactured at the location shown above.
Follow-Up Program: FILK

*** END ***

THIS IS TO CERTIFY THAT the above named manufacturer has submitted to the undersigned satisfactory evidence that the item specified herein complies with the applicable laws and regulations as outlined on the reverse side of this Certificate, and approval is hereby given. This approval shall be in effect until the expiration date hereon unless sooner canceled or suspended by proper authority.

GIVEN UNDER MY HAND THIS 6th DAY OF OCTOBER 2006, AT WASHINGTON D.C.

K. J. HEINZ
Acting Chief, Lifesaving and Fire Safety Standards Division
BY DIRECTION OF THE COMMANDANT

TERMS: The approval of the item described on the face of the Certificate has been based upon the submittal of satisfactory evidence that the item complies with the applicable provisions of the navigation and shipping laws and the applicable regulations in Title 33 and/or Title 46 of the Code of Federal Regulations. The approval is subject to any conditions noted on this Certificate and in the applicable laws and regulations governing the use of the item on vessels subject to Coast Guard inspection or on other vessels and boats.

Consideration will be given to an extension of this approval provided application is made 3 months prior to the expiration date of this Certificate.

The approval holder is responsible for making sure that the required inspections or tests of materials or devices covered by this approval are carried out during production as prescribed in the applicable regulations.

The approval of the item covered by this certificate is valid only so long as the item is manufactured in conformance with the details of the approved drawings, specifications, or other data referred to. No modification in the approved design, construction, or materials is to be adopted until the modification has been presented for consideration by the Commandant and confirmation received that the proposed alteration is acceptable.

NOTICE: Where a manufacturer of safety-at-sea equipment is offering for sale to the maritime industry, directly or indirectly, equipment represented to be approved, which fails to conform with either the design details or material specifications, or both, as approved by the Coast Guard, immediate action may be taken to invoke the various penalties and sanctions provided by law including prosecution under 46 U.S.C. 3318, which provides:

"A person that knowingly manufactures, sells, offers for sale, or possesses with intent to sell, any equipment subject to this part *(Part B. of Subtitle II of Title 46 U.S.C.).* and the equipment is so defective as to be insufficient to accomplish the purpose for which it is intended, shall be fined not more than $10,000, imprisoned for not more than 5 years or both."